Air treatment: pressure reducer UZRR G 1/4

DESCRIPTION

Reducers series “UZRR” are produced in two different models: type UZRRH, fit for in-line or panel mounting and type UZRRM, fit for panel mounting or modular assembly (with filter and lubricator).
Both the two models are available with different scales of regulation and with connections G 1/4.They are in compliance with ATEX directive, 2GD category, upon request.

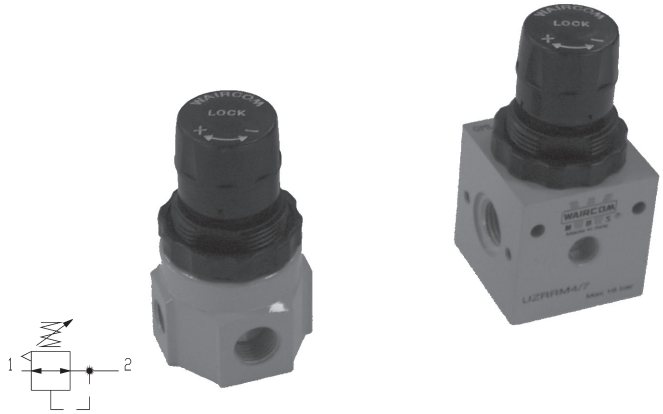

TECHNICAL DATA

Maximum pressure	16 bar
Working temperature	0 ÷ +50 °C (–10 °C with dry air)
Fluid	Filtered, lubricated and unlubricated compressed air
Port size	G 1/4
Pressure gauge port size	G 1/8
Adjusting range (bar)	0,2 ÷ 2 - 0,4 ÷ 4 - 0,8 ÷ 9 - 1,5 ÷ 12
Type of mounting	Modular, in-line, wall and panel mounting
Wall clamping screws	M4x50

DIMENSIONS AND WEIGHT - UZRRM G 1/4

WEIGHT 195 g

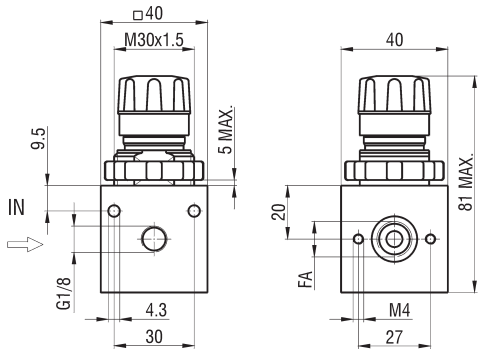

DIMENSIONS AND WEIGHT - UZRRH G 1/4

WEIGHT 120 g

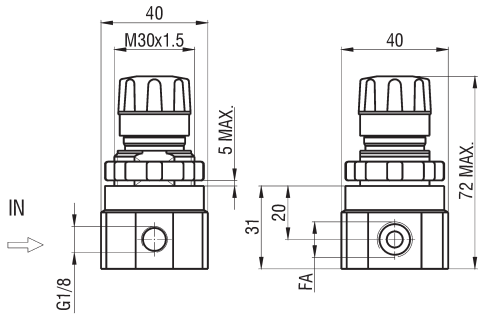

MATERIALS

Body	Aluminium alloy
Closing plug	Brass, NBR rubber
Spring	Stainless steel
Knob	Acetal resin
Adjusting screw	Brass
Diaphragm	Brass, NBR rubber

4

FLOW CHART - UZRR

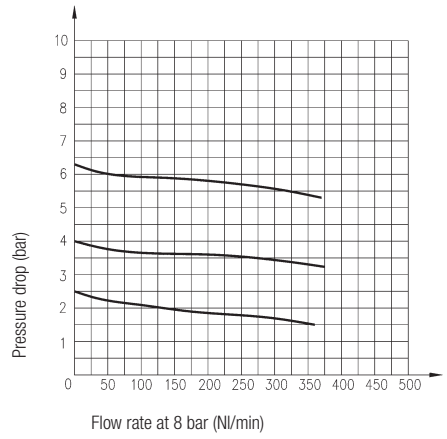

ORDER KEY

UZRR [ ] [ ] [ ] [ ]

- Series
- Mounting type
- Size
- Adjusting range
- ATEX

MOUNTING TAPE

H	For panel mounting	M	Modular

SIZE

4	G 1/4

ADJUSTING RAGE

/3	0,2 ÷ 2 bar	/5	0,4 ÷ 4 bar
/7	0,8 ÷ 9 bar	/12	1,5 ÷ 12 bar

ATEX

/EX Consistent with the ATEX directive Ex II 2GD c T5 T100°C -10°C≤Ta≤50°C

P.S.: Reducers can be supplied without the relieving seal on request; the series becomes **UZR**...

SPARE PARTS

Relieving kit adjustment	UZRR/SG/6
Non-relieving kit adjustment	UZR/SG/5