PS003V-304-2UPN8X-H1141
Pressure sensor – 2 PNP/NPN Transistor Switching Outputs

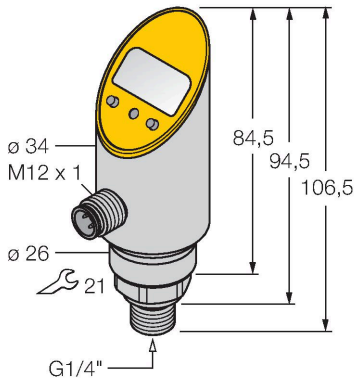

Features

- Rigid process connection, non-rotatable body
- Reading of adjusted values without tool
- Recessed pushbutton and keylock for secure programming
- Permanent indication of pressure (bar, psi, kPa, MPa, misc)
- Peak pressure memory
- Pressure range -1…2.5 bar rel.

Wiring diagram

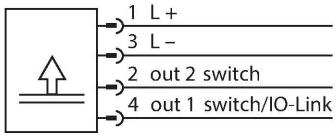

Technical data

Type	PS003V-304-2UPN8X-H1141
ID	6833453
Medium temperature	-40…+85 °C
Pressure range	
Pressure type	Relative pressure
Pressure range	-1…2.5 bar
	-14.5…36.26 psi
	-0.1…0.25 MPa
Admissible overpressure	≤ 12 bar
Burst pressure	≥ 12 bar
Response time	< 3 ms
Power supply	
Operating voltage	18…30 VDC
Current consumption	≤ 50 mA
Protective measure	SELV; PELV according to EN 50178
Short-circuit/reverse polarity protection	yes / yes
Insulation class	III
Outputs	
Output 1	Switching output or IO-Link mode
Output 2	Switching output
Switching output	
Communication protocol	IO-Link
Output function	NO/NC, PNP/NPN
Accuracy	± 0.5 % FS BSL
Rated operational current	0.2 A
Switching frequency	≤ 180 Hz
Switching point distance	≥ 0.5 %

Functional principle

The pressure sensors in the PS product series operate with ceramic measuring cells. As a result of the pressure acting on the ceramic substrate, a signal that is proportional to the pressure is generated and processed electronically. The processed signal is available either as a switching or an analog output signal, depending on the sensor type used. Maximum flexibility thanks to a rigid or rotatable sensor body, a variety of thread types, front-flush or dead-space-free pressure membranes and an accuracy of 0.5 % of full scale guarantee a safe connection to the process.

PS003V-304-2UPN8X-H1141| 03-12-2022 12-10 | Technical modifications reserved

Technical data

Switch point:	(Min. + 0.005 × range)…100 % of full scale
Release point(s)	min up to (SP - 0.005 x range)
Switching cycles	≥ 100 mil.
IO-Link	
IO-Link specification	V 1.0
Transmission physics	corresponds to 3-wire physics (PHY2)
Frame type	2.2
Transmission rate	COM 2 / 38.4 kbps
Process data width	16 bit
Measured value information	14 bit
Switchpoint information	2 bit
Programming	FDT / DTM
Accuracy	± 0.5 % FS BSL
Included in the SIDI GSDML	Yes
Programming options	switch/release point, PNP/NPN; NO/NC; hysteresis/window mode, muting; pressure unit, peak pressure memory
Housing material	Stainless-steel/Plastic, 1.4305 (AISI 303)
Process connection	G 1/4" male thread
Pressure connection material	Stainless steel 1.4305 (AISI 303)
Pressure transducer material	Ceramic Al_2O_3
Sealing material	FPM spez.
Wrench size pressure connection / coupling nut	21
Max. tightening torque of housing nut	35 Nm
Electrical connection	Connector, M12 × 1
Protection class	IP67 IP69K
Ambient temperature	-40…+80 °C
Storage temperature	-40…+80 °C
Shock resistance	50 g (11 ms) , acc. to IEC 68-2-27
Vibration resistance	20 g (9…2000 Hz), according to IEC 68-2-6
EMV	EN 61000-4-2 ESD:4 kV CD / 8 kV AD EN 61000-4-3 HF radiated: 15 V/m EN 61000-4-4 Burst: 2 kV EN 61000-4-5 Surge: 1000 V, 42 Ohm EN 61000-4-6 HF cable bound: 10 V
Tests/approvals	
UL registration number	E183243
Reference conditions acc. to IEC 61298-1	
Temperature	15…+25 °C
Atmospheric pressure	860…1060 hPa abs.

PS003V-304-2UPN8X-H1141| 03-12-2022 12-10 | Technical modifications reserved

Technical data

Humidity	45…75 % rel.
Auxiliary power	24 VDC
Display	4-digit 7-segment display, rotatable by 180°, disengageable
Switching state	2 × LEDs, Yellow
Unit display	5 x LEDs green (bar, psi, kPa, MPa, misc)
Temperature behaviour	
Temperature coefficient span T_{kS}	± 0.15 % of full scale/10 K
Temperature coefficient zero point Tk0	± 0.15 % of full scale/10 K
MTTF	242 years acc. to SN 29500 (Ed. 99) 40 °C
Included in delivery	NBR70 flat seal (USIT ring, nitrile rubber), 1 pc.

Technical data

Type	PS003V-304-2UPN8X-H1141
ID	6833453
Pressure range	
Pressure type	Relative pressure
Pressure range	-1…2.5 bar
	-14.5…36.26 psi
	-0.1…0.25 MPa
Admissible overpressure	≤ 12 bar
Burst pressure	≥ 12 bar
Response time	< 3 ms
Power supply	
Operating voltage	18…30 VDC
Current consumption	≤ 50 mA
Voltage drop at I_e	≤ 2 V
Protective measure	SELV; PELV according to EN 50178
Short-circuit/reverse polarity protection	yes / yes
Protection type and class	IP67 IP69K / III
Outputs	
Output 1	Switching output or IO-Link mode
Output 2	Switching output
Switching output	
Communication protocol	IO-Link
Output function	NO/NC, PNP/NPN
Accuracy	± 0.5 % FS BSL
Rated operational current	0.2 A
Switching frequency	≤ 180 Hz

PS003V-304-2UPN8X-H1141| 03-12-2022 12-10 | Technical modifications reserved

Technical data

Switching point distance	≥ 0.5 %
Switch point:	(Min. + 0.005 × range)…100 % of full scale
Release point(s)	min up to (SP - 0.005 x range)
Switching cycles	≥ 100 mil.
IO-Link	
IO-Link specification	V 1.0
Programming	FDT / DTM
Transmission physics	corresponds to 3-wire physics (PHY2)
Transmission rate	COM 2 / 38.4 kbps
Process data width	16 bit
Measured value information	14 bit
Switchpoint information	2 bit
Frame type	2.2
Accuracy	± 0.5 % FS BSL
Included in the SIDI GSDML	Yes
Temperature behaviour	
Medium temperature	-40…+85 °C
Temperature coefficient zero point Tk0	± 0.15 % of full scale/10 K
Temperature coefficient span T_{kS}	± 0.15 % of full scale/10 K
Ambient conditions	
Ambient temperature	-40…+80 °C
Storage temperature	-40…+80 °C
Vibration resistance	20 g (9…2000 Hz), according to IEC 68-2-6
Shock resistance	50 g (11 ms) , acc. to IEC 68-2-27
EMV	EN 61000-4-2 ESD:4 kV CD / 8 kV AD EN 61000-4-3 HF radiated: 15 V/m EN 61000-4-4 Burst: 2 kV EN 61000-4-5 Surge: 1000 V, 42 Ohm EN 61000-4-6 HF cable bound: 10 V
Mechanical data	
Housing material	Stainless-steel/Plastic, 1.4305 (AISI 303)
Pressure connection material	Stainless steel 1.4305 (AISI 303)
Pressure transducer material	Ceramic Al_2O_3
Sealing material	FPM spez.
Process connection	G 1/4" male thread
Wrench size pressure connection / coupling nut	21
Electrical connection	Connector, M12 × 1
Max. tightening torque of housing nut	35 Nm
Reference conditions acc. to IEC 61298-1	
Temperature	15…+25 °C

PS003V-304-2UPN8X-H1141| 03-12-2022 12-10 | Technical modifications reserved

Technical data

Atmospheric pressure	860…1060 hPa abs.
Humidity	45…75 % rel.
Auxiliary power	24 VDC
Display	4-digit 7-segment display, rotatable by 180°, disengageable
Switching state	2 × LEDs, Yellow
Unit display	5 x LEDs green (bar, psi, kPa, MPa, misc)
Programming options	switch/release point, PNP/NPN; NO/NC; hysteresis/window mode, muting; pressure unit, peak pressure memory
Tests/approvals	
Approvals	cULus
UL registration number	E183243
MTTF	242 years acc. to SN 29500 (Ed. 99) 40 °C
Included in delivery	NBR70 flat seal (USIT ring, nitrile rubber), 1 pc.

Accessories

PTS-COVER	A9350

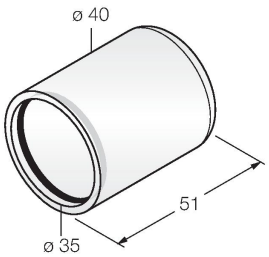

Protective housing

Accessories

Dimension drawing	Type	ID	
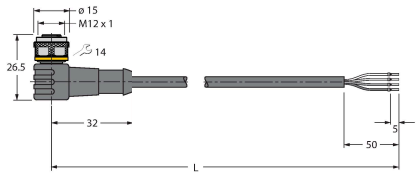	WKC4.4T-2/TEL	6625025	Connection cable, female M12, angled, 4-pin, cable length: 2 m, sheath material: PVC, black; cULus approval; other cable lengths and qualities available, see www.turck.com
	RKC4.4T-2/TEL	6625013	Connection cable, female M12, straight, 4-pin, cable length: 2 m, sheath material: PVC, black; cULus approval; other cable lengths and qualities available, see www.turck.com

PS003V-304-2UPN8X-H1141| 03-12-2022 12-10 | Technical modifications reserved

Dimension drawing	Type	ID	
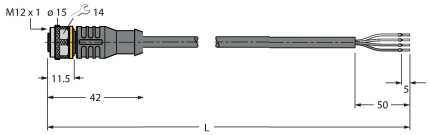	RKC4.4T-2/TXL	6625503	Connection cable, female M12, straight, 4-pin, cable length: 2 m, sheath material: PUR, black; cULus approval; other cable lengths and qualities available, see www.turck.com
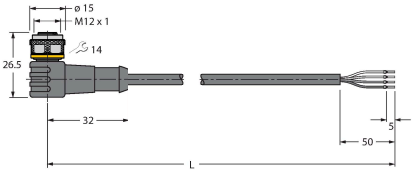	WKC4.4T-2/TXL	6625515	Connection cable, female M12, angled, 4-pin, cable length: 2 m, sheath material: PUR, black; cULus approval; other cable lengths and qualities available, see www.turck.com
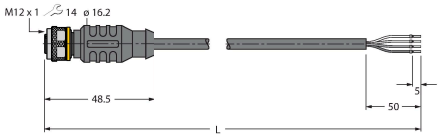	RKC4.4T-P7X2-10/TXL	6626184	Connection cable, female M12, angled, 4-pin, cable length: 10m, sheath material: PUR, black; cULus approval; other cable lengths and qualities available, see www.turck.com

Accessories

Dimension drawing	Type	ID	
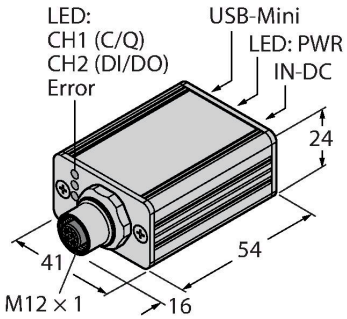	USB-2-IOL-0002	6825482	IO-Link Master with integrated USB port
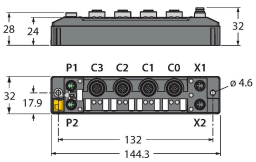	TBEN-S2-4IOL	6814024	Compact multiprotocol I/O module, 4 IO-Link Master 1.1 Class A, 4 universal PNP digital channels 0.5 A

PS003V-304-2UPN8X-H1141| 03-12-2022 12-10 | Technical modifications reserved