EVI 5

Coil System

EVI 5 Coil System

The EVI 5 system by AMISCO includes a complete range of electrical coils suitable for solenoid operated pneumatic and hydraulic valves.
The EVI 5 coils are designed to fit most of the current applications and offer a wide choice of electrical terminations.
The lead version can be equipped with different connectors upon request.

Pneumatic version

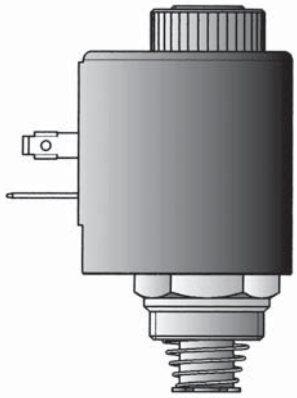

Hydraulic version

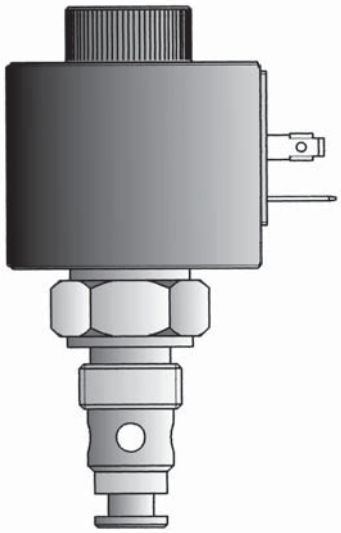

The EVI 5E, EVI 5M, EVI 5P, EVI 5S coils are designed to fit solenoid tubes with Ø = 13 mm.
The EVI 5F is designed to fit solenoid tubes with Ø = 15mm.

Types, power ratings and more technical specifications are described in the following pages.
The coils can be manufactured with different powers or features upon special agreement.

All coils feature:

- **Heat resistant bobbin moulded with 30% glass filled thermoplastic polyester material**
- **Class H 200°C wire according to IEC 60317-13**
- **Built-in magnetic yoke made by low carbon iron**
- **Encapsulation with high quality custom designed glass filled polyamide or thermoplastic polyester**
- **Copper and plastic material used are UL-Listed**

The use of other materials is possible upon special agreements.
These coils are designed in accordance to EN 60204.1 and DIN VDE 0580.

Coil can be supplied and marked EAC for use in Russian Market.
More details about EAC certification can be given on customer request.

Coil can be supplied and marked CSA/UL for Electrical Insulation System (EIS) "E300N", designated by Amisco as AMIH - UL file E343908.

The specificatioans and drawings contained herein are believed to be correct and are given in good faith, however no liability is accepted therefore.
Manufacturer reserves the right to modify said specifications and drawings without notice for technical or commercial reasons.

COIL CODING SPECIFICATIONS

PART NUMBER: 5 X 9 9 Y K 5 5 5 4 4 * *

TYPE
5E = EVI 5E
5M = EVI 5M
5P = EVI 5P
5S = EVI 5S
5F = EVI 5F

COIL BORING
13 = 13 mm
15 = 15 mm (only for EVI 5F)

ELECTRICAL CONNECTION
A = AMP Junior (only for 5P and 5S)
C = Flying leads (only for 5M, 5E and 5P)
D = DIN 43650 A
K = KOSTAL M27x1 (only for 5S)
S = AMP Superseal (only for 5S)
T = DEUTSCH DT04 (only for 5S)

SUPPLY CURRENT
A = Alternating current (A.C.)
D = Direct current (D.C.)
R = Rectified alternating current (R.A.C.)

NOMINAL VOLTAGE
Example: 012 = 12V
024 = 24V

EVI 5M/13 WINDING CODE

Nominal Voltage	Power	Winding Code
12VDC	10W	02
24VDC	10W	02
24VAC	13VA	01
110VAC	13VA	01
230VAC	13VA	01

EVI 5P/13 WINDING CODE

Nominal Voltage	Power	Winding Code
12VDC	13W	03
12VDC	17W	05
24VDC	13W	03
24VDC	17W	05
24VAC	19VA	04
110VAC	19VA	04
230VAC	19VA	03

EVI 5S/13 WINDING CODE

Nominal Voltage	Power	Winding Code
12VDC	20W	01
24VDC	20W	01

EVI 5E/13 WINDING CODE

Nominal Voltage	Power	Winding Code
12VDC	10W	03
24VDC	10W	03
24VAC	13VA	01
110VAC	13VA	01
230VAC	13VA	01

EVI 5F/15 WINDING CODE

Nominal Voltage	Power	Winding Code
12VDC	10W	01
24VDC	10W	01
24VAC	10VA	02
110VAC	10VA	01
230VAC	10VA	01

MARKING
ZN = Standard coil (no logo)
AM = Standard coil + Amisco logo
... = Customized marking

Alternative possibilities for
CUSTOMER LOGO

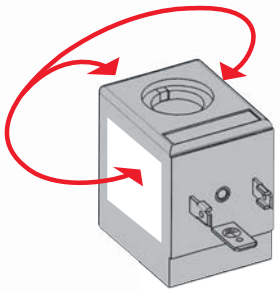

EVI 5M/13

DIN 43650 A (EN 175301-803 ISO 4400)

PART NUMBER 5M13D...

M3 Torque 0,4÷0,6Nm

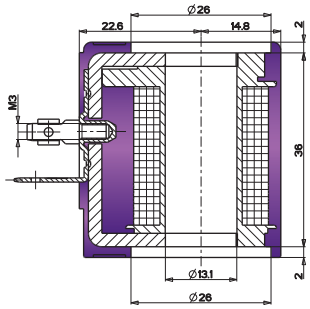

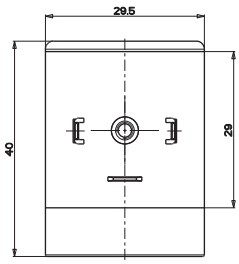

FLYING LEADS

PART NUMBER 5M13C...

500 mm flying leads as a standard, PVC 105°C Ø2.25

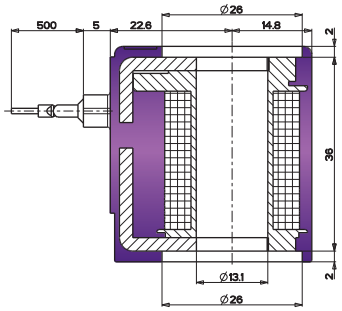

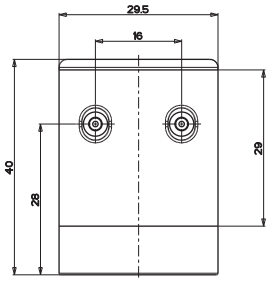

EVI 5E/13

DIN 43650 A (EN 175301-803 ISO 4400)

PART NUMBER 5E13D...

M3 Torque 0,4÷0,6Nm

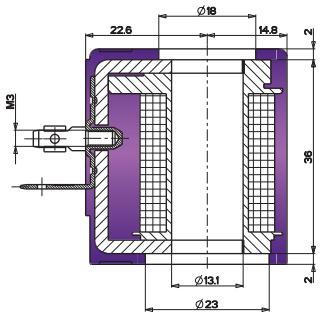

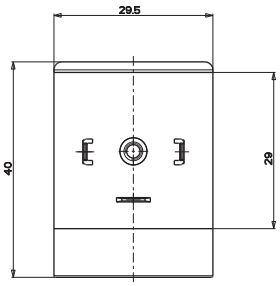

FLYING LEADS

PART NUMBER 5E13C...

500 mm flying leads as a standard, PVC 105°C Ø2.25

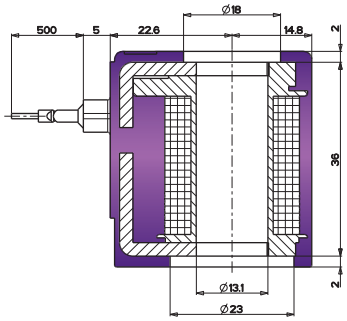

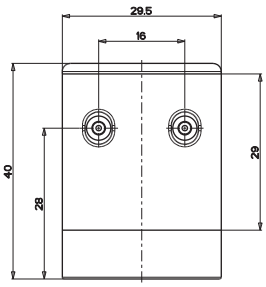

EVI 5M/13 and EVI 5E/13

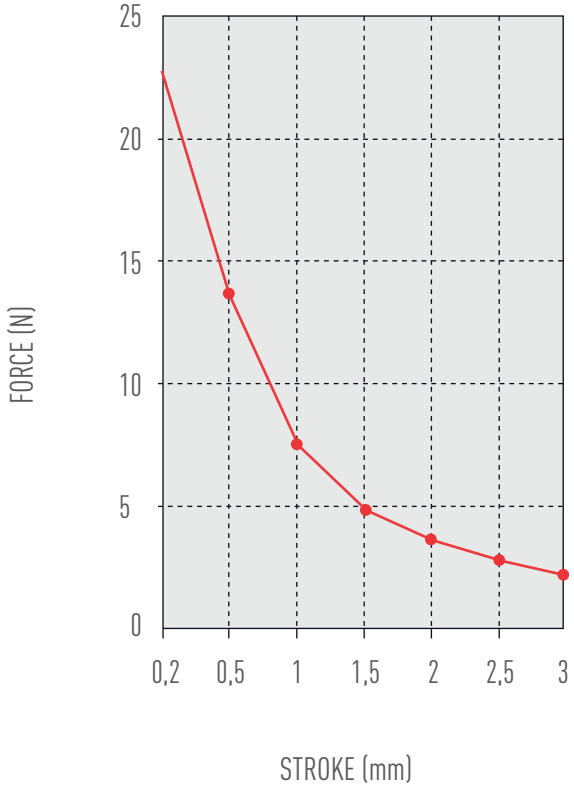

Force stroke curve at –10% nominal voltage and stabilized duty temperature. This graph has to be intended as an indication. In fact it can change according to the specific applications.

Coil type EVI 5M/13 and EVI 5E/13 are suitable for pneumatics and hydraulics applications.
In the first case, additional information are available in the brochure "EVI 5 S13 solenoid system", as complete solenoid.

TECHNICAL DATA

Power: 10 Watt (standard)
Force: see the graph
Duty Cycle: 100% ED (continuous)
at power and temperatures indicated
Standard Operating Voltages: 12-24 VDC 24-110-230 VAC
Other voltages on request
Operating voltage range:
max: 10% over the nominal voltage
min: according to the specific application
Operating temperature range: -40°C ÷ +50°C
Coil insulation: Class F

GENERAL CONSTRUCTION

According to EN 60204.1 and DIN VDE 0580
Materials:
Wire class H200°C
Encapsulant: glass filled Polyamide PA 6.6
Other materials on request

ELECTRICAL CONNECTIONS AND DEGREE PROTECTION

Degree of protection with connector and tube assembled with suitable seals:

DIN 43650A	IP65
FLYING LEADS	IP67

EVI 5M/13 EVI 5E/13

		DC	AC 50/60 Hz
Rated power DC	W	10	
Inrush power AC	VA		23/19
Rated power AC	VA		13/11
Coil temperature rise @ 50°C ambient T		60	70
Copper temperature rise @ 50°C ambient T		100	100

Above-mentioned AC consumption have to be intended only as indicative.
They may change according to the tube design solutions.

The specificatioans and drawings contained herein are believed to be correct and are given in good faith, however no liability is accepted therefore.
Manufacturer reserves the right to modify said specifications and drawings without notice for technical or commercial reasons.

EVI 5P/13

DIN 43650 A (EN 175301-803 ISO 4400)

PART NUMBER 5P13D...

M3 Torque 0,4÷0,6Nm

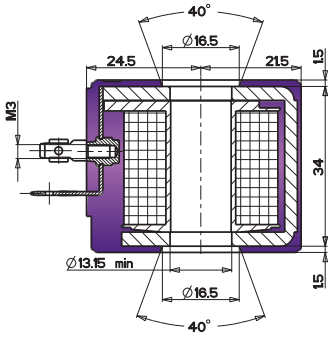

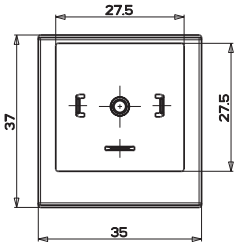

AMP JUNIOR

PART NUMBER 5P13A...

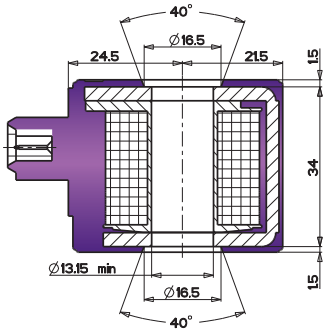

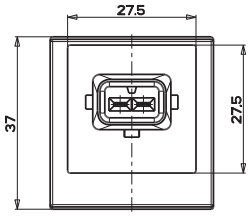

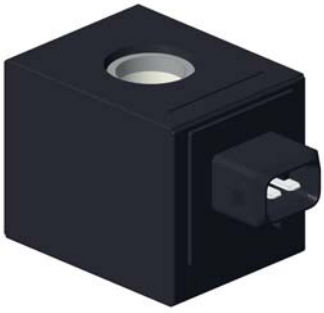

KOSTAL M27x1

PART NUMBER 5P13K...

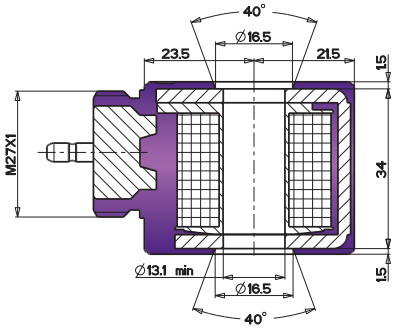

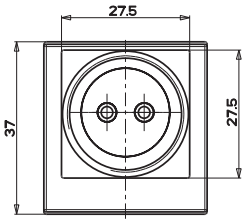

FLYING LEADS

PART NUMBER 5P13C...

1000 mm flying leads as a standard, AWG 18 UL Style 3173

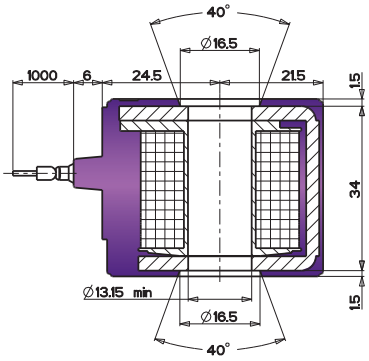

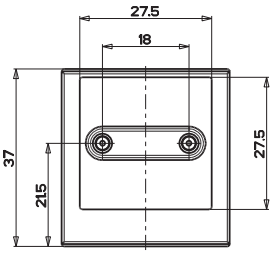

EVI 5P/13

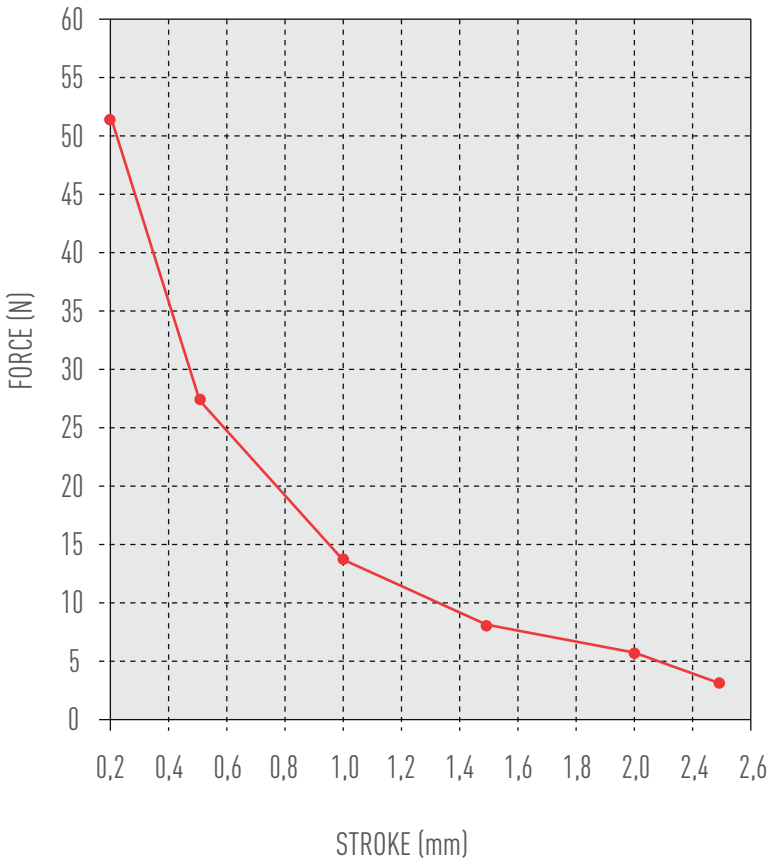

Force stroke curve at –10% nominal voltage and stabilized duty temperature. This graph has to be intended as an indication. In fact it can change according to the specific applications.
This graph is referred to 13W version.

EVI 5P/13

		DC		AC 50/60 Hz	
Rated power DC	W	13	17		
Inrush power AC	VA			32/27	37/31
Rated power AC	VA			19/16	22/18
Coil temperature rise @ 50°C ambient T		55	70	45/36	55/45
Copper temperature rise @ 50°C ambient T		85	105	86/72	100/85

Above-mentioned AC consumption have to be intended only as indicative. They may change according to the tube design solutions.

Coil type EVI 5P/13 is suitable for pneumatics and hydraulics applications.

TECHNICAL DATA

Power: 13 Watt (pneumatic std) 17 Watt (hydraulic std)
Force: see the graph
Duty Cycle: 100% ED (continuous)
at power and temperatures indicated
Standard operating voltages: 12-24 VDC 24-110-230 VAC
Other voltages on request
Operating voltage range:
max: 10% over the nominal voltage
min: according to the specific application
Operating temperature range: -40°C ÷ +50°C
Coil insulation: class F

GENERAL CONSTRUCTION

According to EN 60204.1 and DIN VDE 0580
Materials:
Wire class H200°C
Encapsulant: glass filled Polyamide 6.6
Other materials on request
Degree of protection:
IP 54 (EN 60529)

ELECTRICAL CONNECTIONS AND RELATED IP DEGREE

Degree of protection with connector
and tube assembled with suitable seals:

DIN 43650A	IP65
FLYING LEADS	IP65 / IP67
KOSTAL M27x1	IP67
AMP JUNIOR	IP65

The specificatioans and drawings contained herein are believed to be correct and are given in good faith, however no liability is accepted therefore.
Manufacturer reserves the right to modify said specifications and drawings without notice for technical or commercial reasons.

EVI 5S/13

DIN 43650 A (EN 175301-803 ISO 4400)

PART NUMBER 5S13D...

M3 Torque 0,4÷0,6Nm

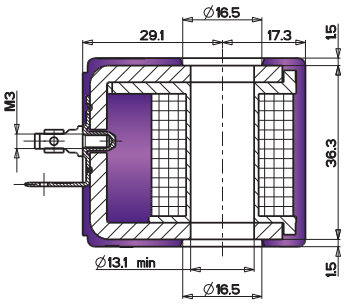

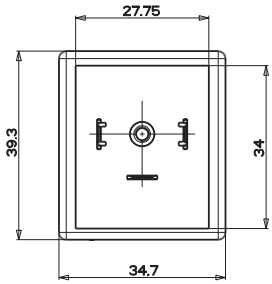

AMP JUNIOR

PART NUMBER 5S13A...

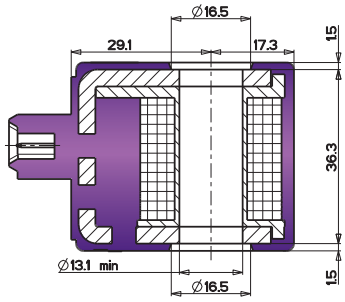

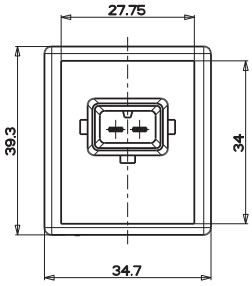

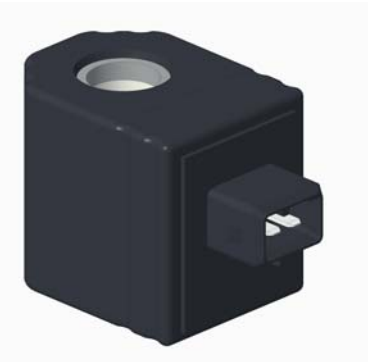

AMP SUPERSEAL

PART NUMBER 5S13S...

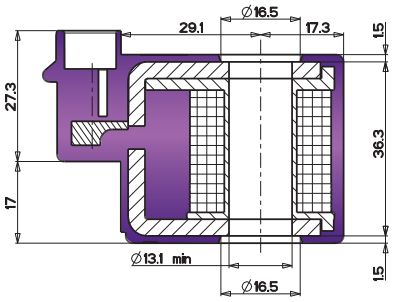

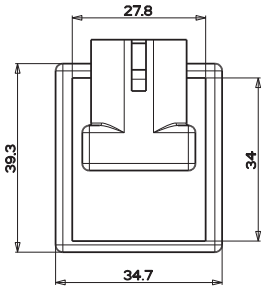

DEUTSCH DT-04

PART NUMBER 5S13T...

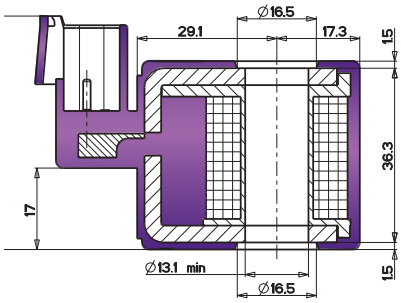

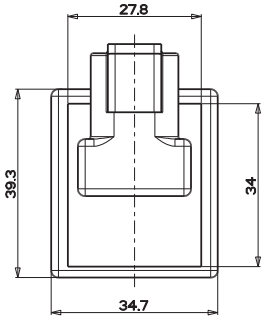

EVI 5S/13

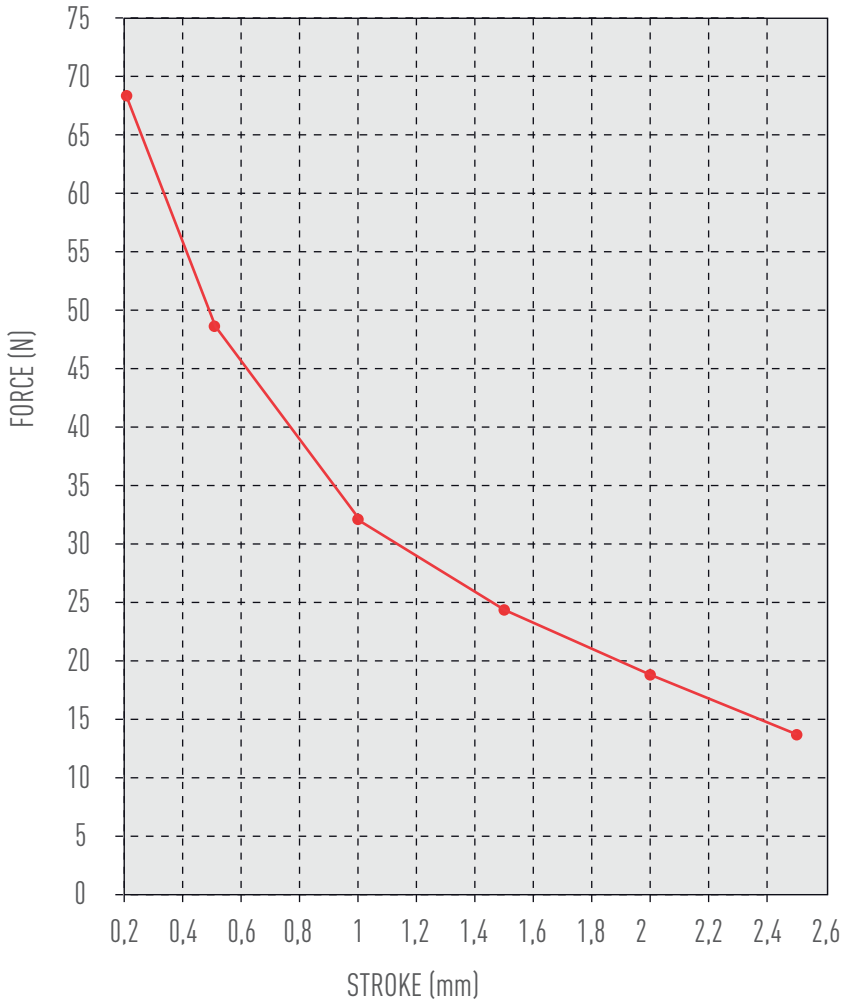

Force stroke curve at –10% nominal voltage and stabilized duty temperature. This graph has to be intended as an indication. In fact it can change according to the specific applications.

EVI 5S/13

		DC
Rated power DC	W	20
Coil temperature rise @ 50°C ambient T		75
Copper temperature rise @ 50°C ambient T		110

Coil type EVI 5S/13 is suitable for pneumatics and hydraulics applications.

TECHNICAL DATA

Power: 10 Watt (standard)
Force: see the graph
Duty cycle: 100% ED (continuous)
at power and temperatures indicated
Standard operating voltages: 12-24 VDC
Other voltages on request
Operating voltage range:
max: 10% over the nominal voltage
min: according to the specific application
Operating temperature range: -40°C ÷ +50°C
Coil insulation: Class F

GENERAL CONSTRUCTION

According to EN 60204.1 and DIN VDE 0580
Materials:
Wire class H200°C
Encapsulant: glass filled Polyamide PA 6.6
Other materials on request
Degree of protection:
IP 54 (EN 60529)

ELECTRICAL CONNECTIONS AND DEGREE PROTECTION

Degree of protection with connector and tube assembled with suitable seals:

DIN 43650A	IP65
AMP JUNIOR integrated	IP65
DEUTSCH DT04 integrated	IP69K
AMP SUPERSEAL integrated	IP69K

The specificatioans and drawings contained herein are believed to be correct and are given in good faith, however no liability is accepted therefore.
Manufacturer reserves the right to modify said specifications and drawings without notice for technical or commercial reasons.

EVI 5F/15

DIN 43650 A (EN 175301-803 ISO 4400)

PART NUMBER 5F15D...

M3 Torque 0,4÷0,6Nm

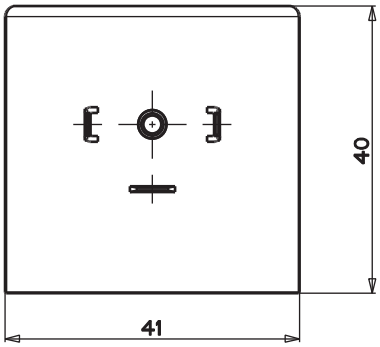

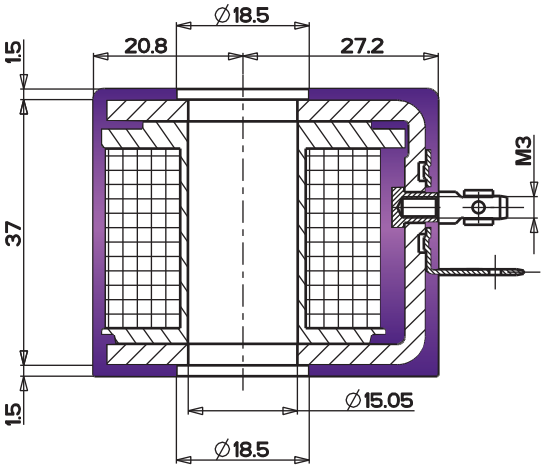

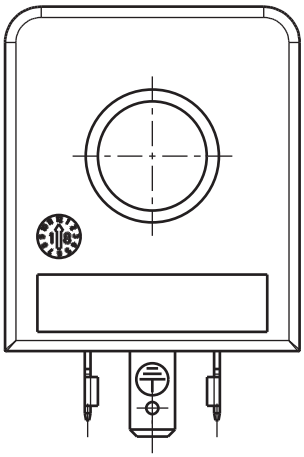

EVI 5F/15

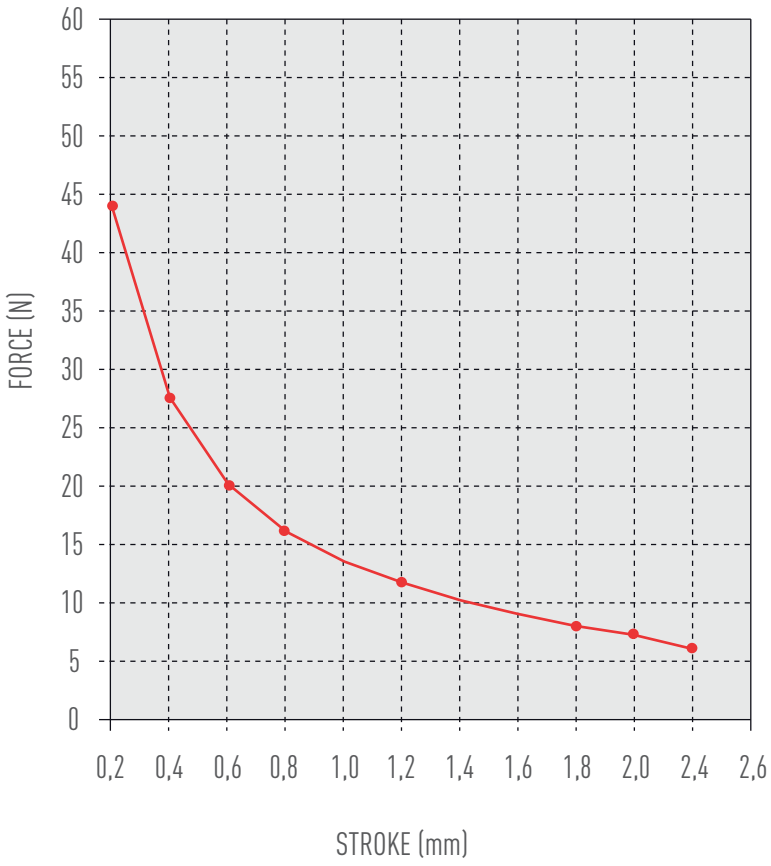

Force stroke curve at –10% nominal voltage and stabilized duty temperature. This graph has to be intended as an indication. In fact it can change according to the specific applications.

EVI 5F/15

		DC
Rated power DC	W	10
Coil temperature rise @ 50°C ambient T		76
Copper temperature rise @ 50°C ambient T		92

Coil type EVI 5F/15 is suitable for hydraulic and fluid applications, it has a 15 mm inner diameter hole.

TECHNICAL DATA

Power: 10 Watt (standard)
Force: see the graph
Duty cycle: 100% ED (continuous)
at power and temperatures indicated
Standard operating voltages: 12-24 VDC
Other voltages on request
Operating voltage range:
max: 10% over the nominal voltage
min: according to the specific application
Operating temperature range: -40°C ÷ +50°C
Coil insulation: Class F

GENERAL CONSTRUCTION

Materials:
Wire class H200°C
Encapsulant: glass filled Polyamide PA 6.6
Other materials on request
Degree of protection:
IP 54 (EN 60529)

ELECTRICAL CONNECTIONS AND DEGREE PROTECTION

Degree of protection with connector
and tube assembled with suitable seals:
DIN 43650A IP 65

The specificatioans and drawings contained herein are believed to be correct and are given in good faith, however no liability is accepted therefore.
Manufacturer reserves the right to modify said specifications and drawings without notice for technical or commercial reasons.

Certifications

UE DECLARATION OF CONFORMITY

We declare under our sole responsibility that the product:

*Coil type: **EVI 5M13***

Nominal voltage: up to 240V
Nominal Power: up to 12W [DC] or 17VA [AC]
Ambient temperature: -40 ÷ +50 °C
Tolerance range on nominal values: ±10%

Type of connection and other information are available on Amisco catalogue or on request.

Is conform to the following directives:

- ***2014/35/UE LV***
- ***2011/65/UE RoHS***

with reference (if applicable) to the following harmonized standards:

- EN 12100 [2010]
- EN 60204/1 [2006]
- EN 60664/1 [2007]
- VDE 0580 [2011]

Filippo Rotondo
Amisco Technical Division Manager

Paderno Dugnano, 20 April 2016

The data supplied in Amisco catalogues are to be consulted, and pertinent accident prevention regulations are to be followed during product installation and use. Any unauthorized work performed by purchaser or by third parties can impair its functions, and relieves Amisco of all warranty claims and liability for any resulting damage.

Amisco S.p.A.
Via Piaggio 70
20037, Paderno Dugnano (MI) – Italy
Tel. +39 02.9900181
Fax +39 02.99001860
www.amisco.it

UE DECLARATION OF CONFORMITY

We declare under our sole responsibility that the product:

*Coil type: **EVI 5E13***

Nominal voltage: up to 240V
Nominal Power: up to 12W [DC] or 17VA[AC]
Ambient temperature: -40 ÷ +50 °C
Tolerance range on nominal values: ±10%

Type of connection and other information are available on Amisco catalogue or on request.

Is conform to the following directives:

- ***2014/35/UE LV***
- ***2011/65/UE RoHS***

with reference (if applicable) to the following harmonized standards:

- EN 12100 [2010]
- EN 60204/1 [2006]
- EN 60664/1 [2007]
- VDE 0580 [2011]

Filippo Rotondo
Amisco Technical Division Manager

Paderno Dugnano, 20 April 2016

The data supplied in Amisco catalogues are to be consulted, and pertinent accident prevention regulations are to be followed during product installation and use. Any unauthorized work performed by purchaser or by third parties can impair its functions, and relieves Amisco of all warranty claims and liability for any resulting damage.

Amisco S.p.A.
Via Piaggio 70
20037, Paderno Dugnano (MI) – Italy
Tel. +39 02.9900181
Fax +39 02.99001860
www.amisco.it

UE DECLARATION OF CONFORMITY

We declare under our sole responsibility that the product:

*Coil type: **EVI 5P13***

Nominal voltage: up to 240V
Nominal Power: up to 17W [DC] or 22VA [AC]
Ambient temperature: -40 ÷ +50 °C
Tolerance range on nominal values: ±10%

Type of connection and other information are available on Amisco catalogue or on request.

Is conform to the following directives:

- ***2014/35/UE LV***
- ***2011/65/UE RoHS***

with reference (if applicable) to the following harmonized standards:

- EN 12100 [2010]
- EN 60204/1 [2006]
- EN 60664/1 [2007]
- VDE 0580 [2011]

Filippo Rotondo
Amisco Technical Division Manager

Paderno Dugnano, 20 April 2016

The data supplied in Amisco catalogues are to be consulted, and pertinent accident prevention regulations are to be followed during product installation and use. Any unauthorized work performed by purchaser or by third parties can impair its functions, and relieves Amisco of all warranty claims and liability for any resulting damage.

Amisco S.p.A.
Via Piaggio 70
20037, Paderno Dugnano (MI) – Italy
Tel. +39 02.9900181
Fax +39 02.99001860
www.amisco.it

UE DECLARATION OF CONFORMITY

We declare under our sole responsibility that the product:

*Coil type: **EVI 5S13***

Nominal voltage: up to 24V
Nominal Power: up to 20W [DC]
Ambient temperature: -40 ÷ +50 °C
Tolerance range on nominal values: ±10%

Type of connection and other information are available on Amisco catalogue or on request.

Is conform to the following directives:

- ***2014/35/UE LV***
- ***2011/65/UE RoHS***

with reference (if applicable) to the following harmonized standards:

- EN 12100 [2010]
- EN 60204/1 [2006]
- EN 60664/1 [2007]
- VDE 0580 [2011]

Filippo Rotondo
Amisco Technical Division Manager

Paderno Dugnano, 20 April 2016

The data supplied in Amisco catalogues are to be consulted, and pertinent accident prevention regulations are to be followed during product installation and use. Any unauthorized work performed by purchaser or by third parties can impair its functions, and relieves Amisco of all warranty claims and liability for any resulting damage.

Amisco S.p.A.
Via Piaggio 70
20037, Paderno Dugnano (MI) – Italy
Tel. +39 02.9900181
Fax +39 02.99001860
www.amisco.it

Certifications

AMISCO

UE DECLARATION OF CONFORMITY CE

We declare under our sole responsibility that the product:

*Coil type: **EVI 5F15***

Nominal voltage: up to 230V DC
Nominal Power: up to 11W [DC]
Ambient temperature: -40 ÷ +50 °C
Tolerance range on nominal values: ±10%

Type of connection and other information are available on Amisco catalogue or on request.

Is conform to the following directives:

- ***2014/35/UE LV***
- ***2011/65/UE RoHS***

with reference (if applicable) to the following harmonized standards:

- EN 12100 [2010]
- EN 60204/1 [2006]
- EN 60664/1 [2007]
- VDE 0580 [2011]

Filippo Rotondo
Amisco Technical Division Manager

Paderno Dugnano, 04 October 2016

The data supplied in Amisco catalogues are to be consulted, and pertinent accident prevention regulations are to be followed during product installation and use. Any unauthorized work performed by purchaser or by third parties can impair its functions, and relieves Amisco of all warranty claims and liability for any resulting damage.

Amisco S.p.A.
Via Piaggio 70
20037, Paderno Dugnano (MI) – Italy

Tel. +39 02.9900181
Fax +39 02.99001860
www.amisco.it

Certificate of Compliance

Certificate Number 20110331-E343908
Report Reference E343908, 2011 March 31
Issue Date 2011 March 31

Page 1 of 1

Underwriters Laboratories

Issued to: AMISCO SPA

VIA PIAGGIO 70
20037 PADERNO DUGNANO MI ITALY

This is to certify that representative samples of SYSTEMS, ELECTRICAL INSULATION
Class 180 (H) transformer, motor, or coil insulation system designated AMIH.

Have been investigated by Underwriters Laboratories Inc.® (UL) or any authorized licensee of UL in accordance with the Standard(s) indicated on this Certificate..

Standard(s) for Safety: Systems of Insulating Materials - General, UL1446
CAN/CSA C22.2 No. 0-M91 Appendix B

Additional Information: See UL On-Line Certification Directory at www.UL.com for additional information.

Only those products bearing the UL Recognized Component Marks for the U.S. and Canada should be considered as being covered by UL's Recognition and Follow-Up Service and meeting the appropriate U.S. and Canadian requirements.

The UL Recognized Component Mark for the U.S. generally consists of the manufacturer's identification and catalog number, model number or other product designation as specified under "Marking" for the particular Recognition as published in the appropriate UL Directory. As a supplementary means of identifying products that have been produced under UL's Component Recognition Program, UL's Recognized Component Mark, UL may be used in conjuction with the required Recognized Marks. The Recognized Component Mark is required when specified in the UL Directory preceeding the recognitions or under "Markings" for the individual recognitions. The UL Recognized Component Mark for Canada consists of the UL Recognized Mark for Canada UL and the manufacturer's identification and catalog number, model number or other product designation as specified under "Marking" for the particular Recognition as published in the appropriate UL Directory.

Look for the UL Recognized Component Mark on the product

William R. Carney
Director, North American Certification Programs
Underwriters Laboratories Inc.

Any information and documentation involving UL Mark services are provided on behalf of Underwriters Laboratories Inc. (UL) or any authorized licensee of UL. For questions, please contact a local UL Customer Service Representative at http://www.ul.com/global/eng/pages/corporate/contactus/

This Certificate does not replace the original EAC Document

SERCONS CERTIFICATION AUTHORITY

EAC

CERTIFICATE

In accordance with
SERCONS INTERNATIONAL
Russian Certification Authority in Europe

the company:
AMISCO S.p.A.
Via Piaggio 70,
Paderno Dugnano (MI), 20037
ITALY

fulfills the necessary requirements to be certified according to EAC regulations.

Valid until: 22.05.2023

SERCONS General Director of SERCONS GROUP

SERCONS INTERNATIONAL — Certification Authority
Piazza della Repubblica,32, 20124 MILAN | +39 02 8001 2140| www.SERCONS.ch/it

www.amisco.it

AMISCO S.p.a.
Via Piaggio, 70
20037 Paderno Dugnano (Mi)
Italy

Tel. +39 02.99.00.181
Fax +39 02.99.00.18.60
amisco@amisco.it

Rev. 03/2019