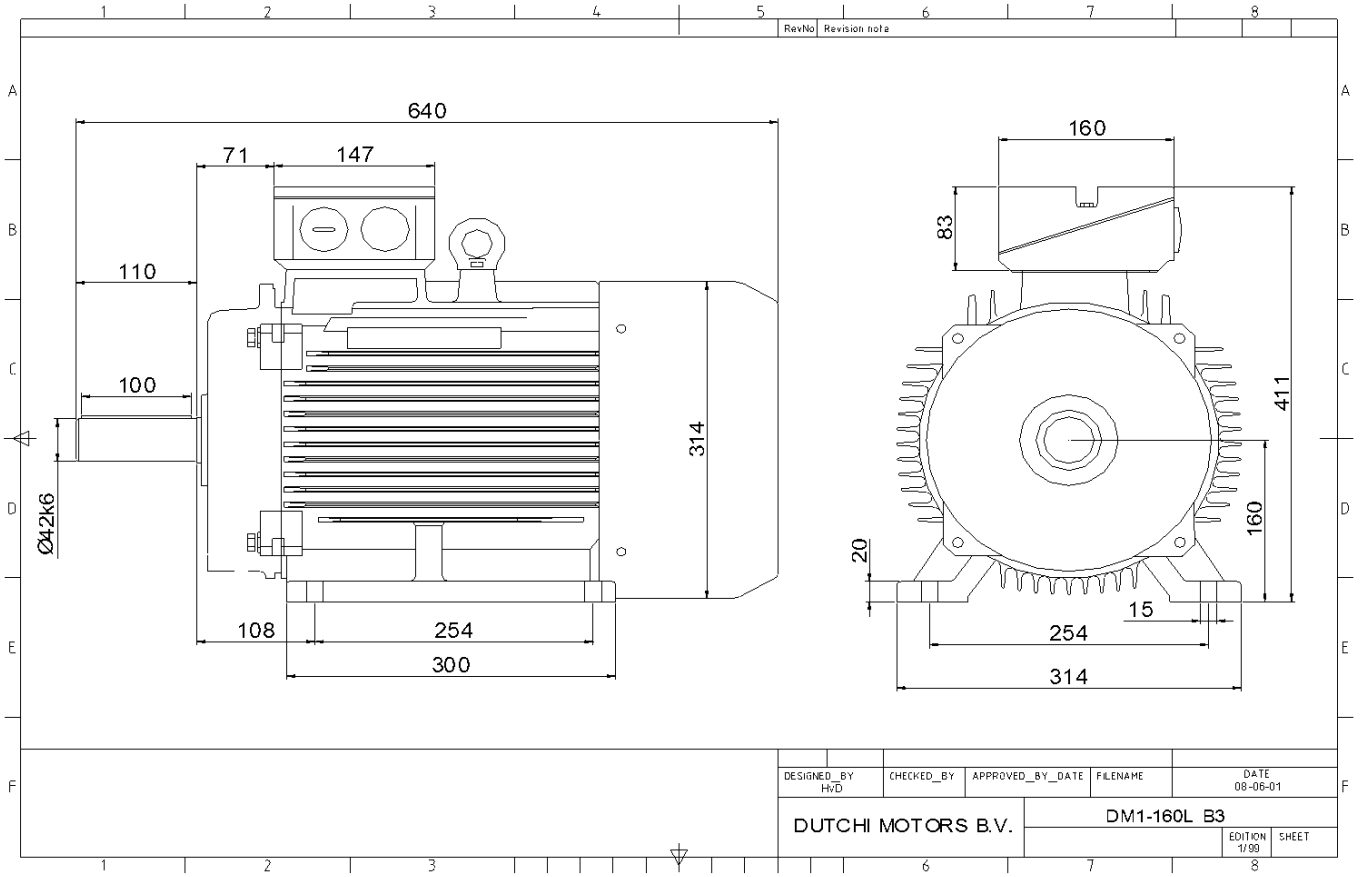

Specification	IEC 60034-1			
Manufacturer	DM Motors Denmark A/S			
Motor type	DM1-	160 L2		
Rated power	18,50	kW	S1	duty
Speed	2935	r.p.m		
Voltage	400	/	690	V
Frequency	50	Hz		
Connection	Δ	/	Y	
Amps full load	32,7	/	18,9	A
Amps no-load(400V)	8,27	A		
Enclosure	IP 55			
Insulation Class	F (temp. rise B (80 K))			
Max. coolant temp.	40°C			
Max. altitude	1.000	mtr, above sea level		
Comment	3 x PTC 150°C			
Cable entries	2 x M40x1,5 + 1 x M20x1,5 (ptc)			
Feature	Cast-iron motor			
Weight	134	kg		
Catalog no.	11132A18D			
Warranty	12~18 months			

Efficiency class			IE1		
Load data	100%	75%	50%	25%	
Efficiency	90,4	91,0	90,1	85,1	%
Power factor	0,90	0,90	0,84	0,63	

Sound pressure level (1m)		76,3	dB(A)
Resistance R20 (open)		0,469	Ω
Resistance R20	Δ	0,313	Ω
Full load torque		60	Nm
DOL Starting torque vs FL torque		2,31	
DOL Pull up torque vs FL torque		1,67	
DOL Pull out torque vs FL torque		3,18	
Star-Delta Starting torque vs FL torque		0,72	
Star-Delta Pull up torque vs FL torque		0,52	
Star-Delta Pull out torque vs FL torque		0,99	
DOL Starting current vs FL current		7,30	
Star Delta Starting current vs FL current		2,28	
Rotor Inertia		0,0525	kgm2
Bearing DE		6309 - ZZ C3	
Bearing NDE		6309 - ZZ C3	

WI	Change	date	sign.

DM Motors Denmark A/S	Discription	date	sign.
Hopballevej 60	Drawing made by :	01-01-15	RD
7100 Vejle			
Tel : +45 70 27 13 10	info@dmmotors.dk		
Fax : +45 70 27 13 19	www.dmmotors.dk		

We make all efforts to better our products. Versions, technical data and figures could be changed therefore. They are not binding before written confirmation.